A Darkfield/Rheinberg Accessory Kit for Olympus BH-2 Microscopes

Revision 3

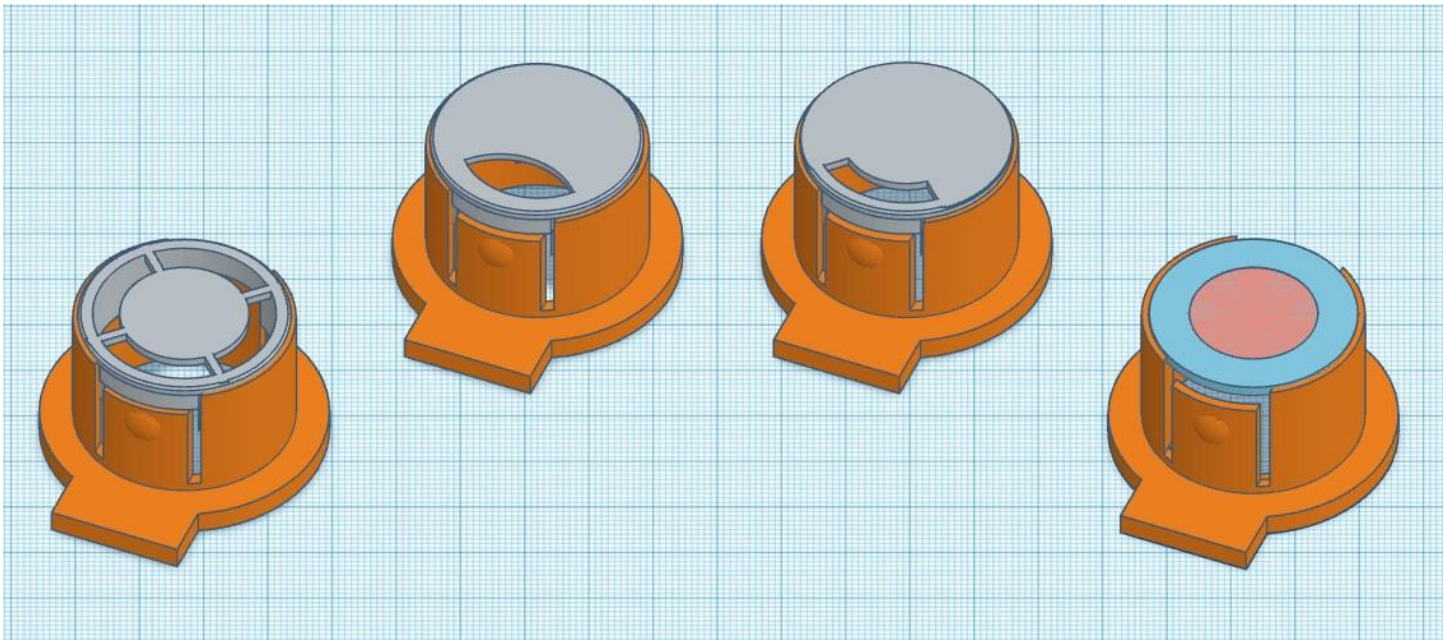

Revision History		
Revision	**Description of Changes**	**Date**
1	Initial release.	August 19, 2022
2	Fixed STL files link.	December 24, 2022
3	Increased filter diameter and added grab tab to inserts. Added polarizing DF insert.	April 10, 2024

Table of Contents

Introduction

Darkfield and Rheinberg illumination are microscopy techniques which provide optical staining of specimens under observation. These optical staining techniques are often used to enhance specimen contrast through optical methods, rather than through the application of chemical staining compounds, and are especially valuable for viewing living organisms which might otherwise be damaged or killed by the application of chemical stains. Thanks to the relative simplicity with which darkfield and Rheinberg can be incorporated into a typical biological light microscope, and because of the stunning results that they provide, both darkfield and Rheinberg illumination are extremely popular with amateur microscopists.

Darkfield illumination can be achieved by placing a simple stop beneath the aperture diaphragm within the microscope condenser, the central portion of which obscures the direct light which would normally be collected by the objective lens, and the open annulus area of which allows indirect light (which falls outside the acceptance angle of the objective lens and is therefore not collected by the objective lens) to illuminate the specimen plane. When no specimen is present on the stage, this condition produces a completely dark visual field since all direct (zero order) light has been obscured, leaving only indirect light which is not collected by the objective lens. When a specimen is then placed on the stage, some of the indirect light that strikes the specimen will be scattered/diffracted such that it enters the collection angle of the objective lens and is collected to form the final image. The result is a brightly illuminated specimen against a completely dark background.

Rheinberg illumination works in a similar fashion to darkfield, except that the darkfield stop is replaced by a concentric, bi-colored filter to create the Rheinberg effect. In a Rheinberg filter, the central disk of the darkfield stop (which originally blocked the direct light from entering the objective lens) is replaced by an optical filter material of some color, to impart this color onto the direct (zero order) light. The outer annulus portion of the darkfield stop, through which the indirect light that falls outside the acceptance area of the objective lens comes through, is replaced by an optical filter material of some contrasting color to the central disk, to impart this contrasting color onto the indirect light. Since the indirect light is not collected by the objective, the color of the indirect light does not show up in the visual field when there is no specimen on the stage, leaving a background of the color of the central disk of the filter. When a specimen is then placed on the stage, some of the indirect light that strikes the specimen will be scattered/diffracted such that it enters the collection angle of the objective lens and is collected to form the final image. The result is a brightly illuminated specimen which is colored by the annulus portion of the filter, in stark contrast to a background which is colored by the central disk.

Ideally, both darkfield stops and Rheinberg filters should be located at the same optical plane as the aperture diaphragm within the microscope condenser, but this is of course not physically possible for an add-on accessory to a conventional condenser. Given this limitation, best results will be obtained when the darkfield stops or Rheinberg filters are placed as close to the condenser aperture diaphragm as possible. The collar-mount condensers used on many microscopes are constructed such that a filter carrier, which is present on the bottom of the condenser, is sufficiently close to the aperture diaphragm that darkfield stops or Rheinberg filters placed in this carrier provide good results. In comparison, microscopes which use dovetail mounted condensers (such as the Olympus BH-2 and Nikon scopes from the same era), are notoriously difficult for the amateur to equip for darkfield or Rheinberg illumination. The reason for this difficulty is that the condensers on these scopes are constructed in such a way that it is not possible for a filter carrier on the bottom of the condenser to position a stop or filter sufficiently close to the aperture diaphragm to provide acceptable darkfield or Rheinberg illumination. In order to use a simple stop or filter to obtain darkfield or Rheinberg on these scopes, a carrier of some sort is necessary which can be placed up into the bottom bore of the condenser to position the stop or filter close to the aperture diaphragm within.

Scope of this Document

This document describes the fabrication and usage of the *BH2-DFR Accessory Kit*, which is a collection of 3D-printed parts that allow Olympus BH-2 microscopes to be equipped for darkfield, oblique darkfield, or oblique illumination using inserts from the kit, or Rheinberg illumination, using standard 32mm Rheinberg filters which are not included in the kit.

Versions of the BH2-DFR

There are two versions of the *BH2-DFR* which can be made from the components in *the BH2-DFR Accessory Kit*. The *BH2-DFR-CD* version was designed to be used with the BH2-CD condenser (the non-corrected Abbe condenser commonly found on BHT and BHTU scopes, which has an N.A. of 1.25), and the *BH2-DFR-AAC* version, which was designed to be used with the

BH2-AAC condenser (the aplanatic achromatic condenser commonly found on BHS scopes, which has an N.A. of 1.4). Although the two versions are similar, the *BH2-DFR-AAC* version places the stops or filters a bit deeper into the body of the condenser than the *BH2-DFR-CD* version, since this is where the aperture diaphragm in the BH2-AAC is located.

Cross-Compatibility

The *BH2-DFR-CD* version of the *BH2-DFR* can be freely used with either BH2-CD or BH2-AAC condensers. When the *BH2-DFR-CD* version is used in a BH2-AAC condenser, the stop inserts will be positioned a bit further away from the aperture diaphragm than would be the case if the recommended *BH2-DFR-AAC* version were used. This means that the results obtained using the *BH2-DFR-CD* version in the BH2-AAC condenser will, at least in theory, be inferior to what the *BH2-DFR-AAC* version would provide (although the difference will be very minimal). To correct for this difference, all the user need do is choose a stop a bit larger in diameter than they might otherwise use.

The BH2-DFR-AAC version should never be used in the BH2-CD condenser, as damage to the internal iris mechanism within the condenser may result.

An Alternate Solution for Oblique Illumination

Although the *BH2-DFR Accessory Kit* does provide oblique illumination capabilities for the Olympus BH-2, a better solution for oblique illumination is the *BH2-OBL Accessory Kit* (see ***An Oblique Accessory Kit for Olympus BH-2 Microscopes***), which was specifically designed to provide oblique illumination for the Olympus BH-2. The *BH2-OBL* is superior for oblique illumination in that it includes a provision to allow the user to easily change the physical positioning of the oblique aperture while viewing the specimen.

The BH2-DFR Accessory Kit

The *BH2-DFR Accessory Kit* consists of a collection of simple 3D-printed parts, as described in the sections below. These parts can be easily made using virtually any low-cost 3D FDM printer.

The Insert Carriers and Filter Carriers

Both the *BH2-DFR-CD* and *BH2-DFR-AAC* versions of the *BH2-DFR* include an insert carrier for use with the darkfield, oblique, oblique darkfield, and custom/filter inserts in the kit, as well as two filter carriers (shallow and deep) for use with Rheinberg filters of differing thicknesses. The shallow filter carriers accept standard 32mm Rheinberg filters up to 1.5mm in thickness, whereas the deep carriers accept 32mm filters up to 3.0mm in thickness. The various *BH2-DFR-CD* carriers (**Figure 1**) can be distinguished from the *BH2-DFR-AAC* carriers (**Figure 2**) by the presence of a slight step-down in the outer diameter of the upper portion of the *BH2-DFR-AAC* carriers (**Figure 2**). The filter carriers can be distinguished from the insert carriers by the presence of a filter ledge within the inner surface of the filter carriers (**Figure 1**) which supports standard 32mm diameter filters. Be sure to always use the appropriate filter carrier that matches the thickness of the filters you wish to use, otherwise the iris mechanism of the condenser could be damaged if the filter protrudes too far from the upper end of the carrier.

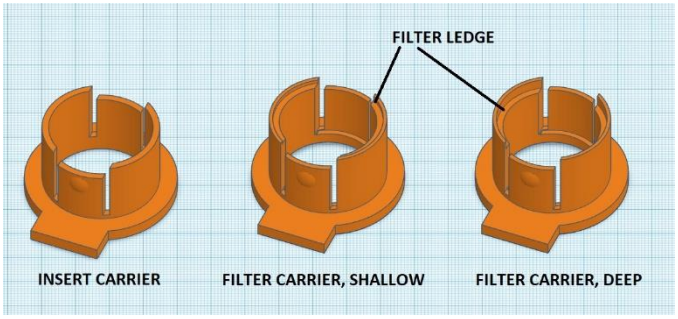

Figure 1 – The carriers for the BH2-CD condenser

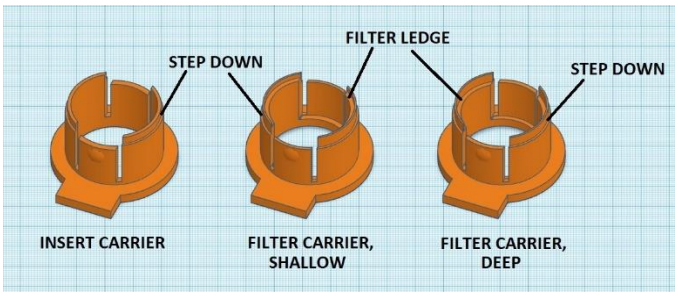

Figure 2 – The carriers for the BH2-AAC condenser

Since the *BH2-DFR-CD* and *BH2-DFR-AAC* versions of the *BH2-DFR* are similar in appearance, only the *BH2-DFR-CD* version will be illustrated throughout the remainder of this document.

The Custom and Filter Inserts

The *BH2-DFR Accessory Kit* includes four custom/filter inserts (**Figure 3**), all of which are compatible with both the *BH2-DFR-CD* and the *BH2-DFR-AAC* versions of the *BH2-DFR*. These inserts can be used to make custom insert stops or to utilize filters for specific applications not covered by existing inserts.

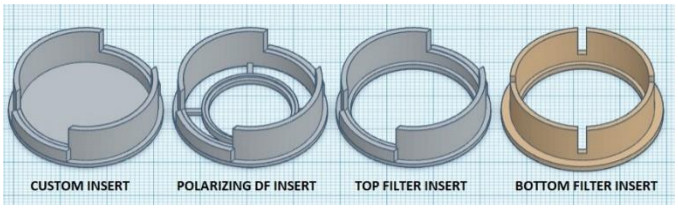

Figure 3 – Custom and filter inserts for the BH2-DFR

Custom Insert

The custom insert (**Figure 3**, left) can be modified by drilling or cutting custom apertures into the face of the insert to meet specific requirements, or the STL file for the custom insert can imported into appropriate 3D modeling software and edited within, to print the desired stops.

Polarizing Darkfield Insert

The polarizing darkfield insert (**Figure 3**, middle left) was designed to accept a 19mm disk of linearly polarized film. The disk must be secured to the underside of the central recess using some sort of adhesive, since gravity will not hold the disk in place. This insert, when so equipped, allows the user to utilize a linearly polarized filter placed over the field lens (below the condenser) to quickly select between brightfield, darkfield, or anything in between, without fussing with the condenser.

Top Filter Insert

The top filter insert (**Figure 3**, middle right) can be used to place custom filters or stops of 28.4mm diameter into the upper opening of the *BH2-DFR*. Be sure to secure any custom filters or stops into the insert before placing the insert into the carrier, to prevent the filters or stops from falling out during use.

Bottom Filter Insert

The bottom filter insert (**Figure 3**, right) can be used to place custom filters of 28.4mm diameter into the lower opening of the *BH2-DFR* insert carriers. Be sure to secure the filters in the insert before placing the insert into the carrier, to prevent the filters from falling out during use.

The Darkfield Inserts

The *BH2-DFR Accessory Kit* includes a comprehensive collection of darkfield inserts, with central stops ranging in diameter from 14mm to 25mm, in 1mm increments (**Figure 4**). The darkfield inserts are compatible with both the *BH2-DFR-CD* and *BH2-DFR-AAC* versions of the *BH2-DFR*, to provide darkfield capabilities for objective lenses up to 40X magnification.

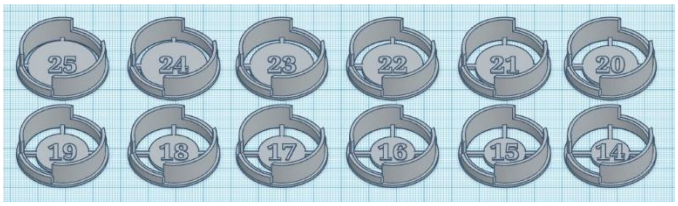

Figure 4 – Darkfield inserts for the BH2-DFR

The Oblique Darkfield Inserts

The *BH2-DFR Accessory Kit* includes a comprehensive collection of oblique darkfield inserts, with central stops ranging in diameter from 14mm to 25mm, in 1mm increments (**Figure 5**). These oblique darkfield inserts are similar to the darkfield inserts, except that all but one of the illuminating quadrants have been obscured to provide an oblique aspect to the darkfield illumination. The oblique darkfield inserts are compatible with both the *BH2-DFR-CD* and *BH2-DFR-AAC* versions of the *BH2-DFR*, to provide oblique darkfield capabilities for objective lenses up to 40X magnification.

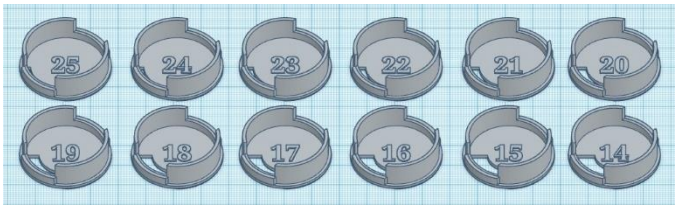

Figure 5 – Oblique darkfield inserts for the BH2-DFR

The Oblique Inserts

The *BH2-DFR Accessory Kit* includes an assortment of oblique inserts (**Figure 6**) which are compatible with both the *BH2-DFR-CD* and *BH2-DFR-AAC* versions of the *BH2-DFR*, to provide oblique capabilities for objective lenses up to 40X magnification.

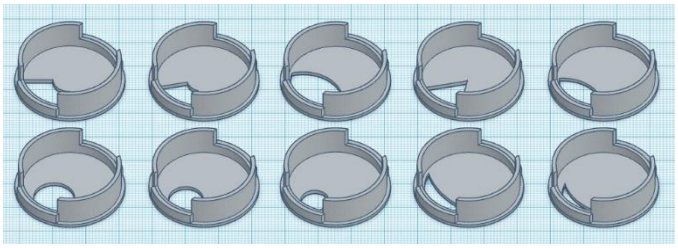

Figure 6 – Oblique inserts for the BH2-DFR

BH2-DFR Configurations

The *BH2-DFR Accessory Kit* can be easily configured to provide any of the four basic illumination modes (darkfield, oblique, oblique darkfield, or Rheinberg), as shown in **Figure 7**. The procedures to set up the *BH2-DRF* for these modes are described in the sections below.

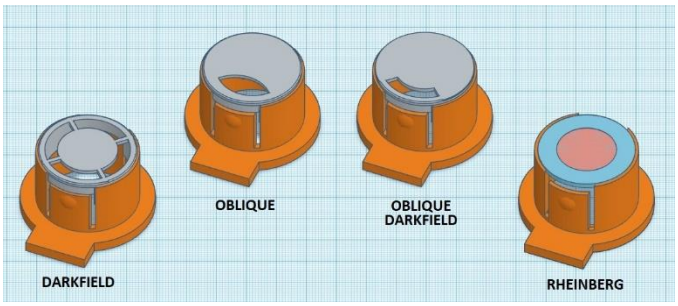

Figure 7 – The various configurations of the BH2-DFR

Darkfield, Oblique Darkfield, and Oblique Modes

The *BH2-DFR Accessory Kit* can be configured to provide darkfield, oblique darkfield, or oblique illumination by

simply placing the desired insert type into either the *BH2-DFL-CD* or *BH2-DFR-AAC* insert carrier (**Figure 1** and **Figure 2,** right), as appropriate. When installing inserts into the insert carriers, be sure to align the inserts such that the two alignment tabs on the insert (**Figure 8**) seat into the clearance spaces above the spring tabs of the carrier (**Figure 9**), so that the insert drops fully into the carrier and does not pose a risk of damage to the iris mechanism within the condenser.

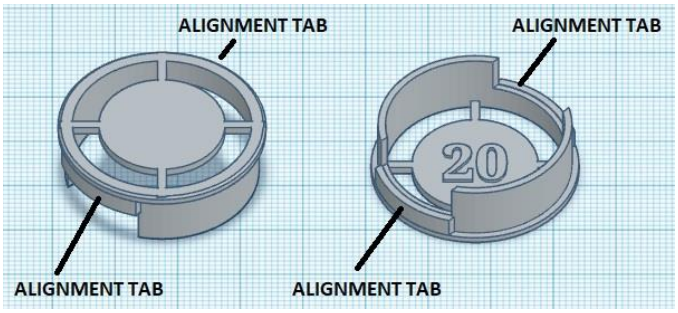

Figure 8 – The alignment tabs of the inserts

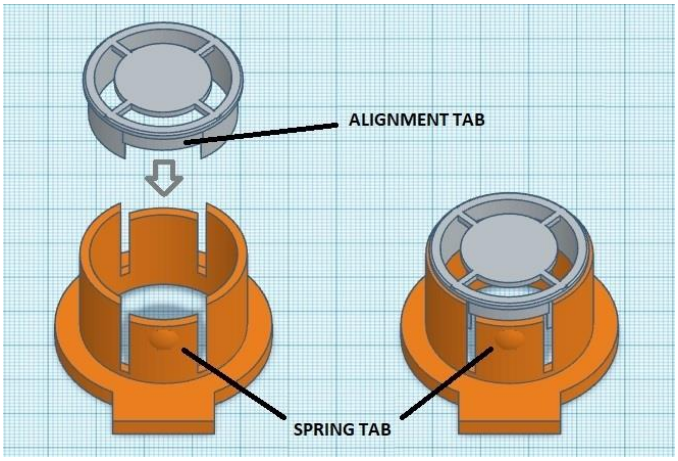

Figure 9 – Proper alignment of the inserts in the carrier

Using a Bottom Filter in the Insert Carrier

A 28.4mm diameter filter may be installed in the bottom of either the *BH2-DFR-CD* or *BH2-DFR-AAC* insert carriers, by using the bottom filter insert (**Figure 3**, right). Simply place the desired 28.4mm diameter filter into the bottom filter insert (**Figure 10**) and place the bottom filter insert, with the filter in place, into the bottom of the insert carrier (**Figure 11**).

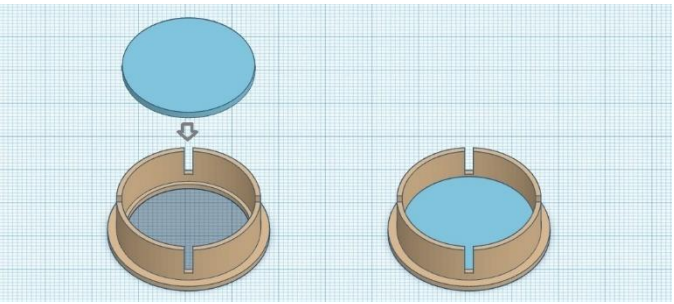

Figure 10 – Placing a filter in the bottom filter insert

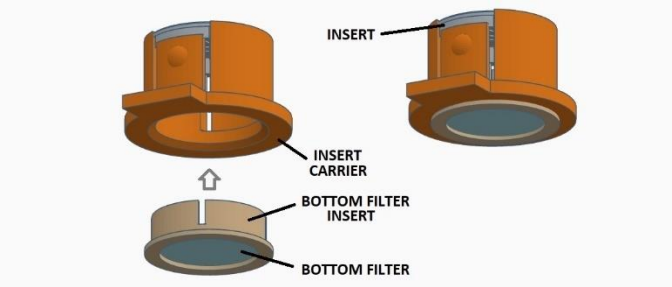

Figure 11 – Install the bottom insert into the insert carrier

Rheinberg Mode

The *BH2-DFR Accessory Kit* can be configured to provide Rheinberg Illumination by simply placing the desired 32mm diameter Rheinberg filter (not included in the kit) into the appropriate *BH2-DFR-CD* or the *BH2-DFR-AAC* filter carriers (**Figure 1** and **Figure 2**), making sure to match the thickness of the filter to the depth of the filter ledge in the filter carrier (shallow or deep), to prevent damage to the condenser.

Download the STL Files

Before you can print the various component parts of the specific version (*BH2-DFR-CD* or *BH2-DFR-AAC*) of the *BH2-DFR* that you wish to make, you must first obtain the appropriate 3D model STL files for that specific version.

STL Files for the Insert/Filter Carriers

The STL files for the three carriers for both the *BH2-DFR-CD* and *BH2-DFR-AAC* versions of the *BH2-DFR* are listed in **Table 1**.

Table 1 – STL Files for the BH2-DFR Carriers	
Filter Carrier, Deep (for BH2-CD)	Filter_Carrier_Deep_CD.stl
Filter Carrier, Shallow (for BH2-CD)	Filter_Carrier_Shallow_CD.stl
Insert Carrier (for BH2-CD)	Insert_Carrier_CD.stl
Filter Carrier, Deep (for BH2-AAC)	Filter_Carrier_Deep_AAC.stl
Filter Carrier, Shallow (for BH2-AAC)	Filter_Carrier_Shallow_AAC.stl
Insert Carrier (for BH2-AAC)	Insert_Carrier_AAC.stl

STL Files for the Custom/Filter Inserts

The STL files for the custom and filter inserts, which are compatible with both the *BH2-DFR-CD* and *BH2-DFR-AAC* versions of the *BH2-DFR,* are listed in **Table 2**.

Table 2 – STL Files for the BH2-DFR Custom and Filter Inserts	
Custom Insert	Custom_Insert.stl
Polarizing Darkfield Insert	Polarizing_DF_Insert.stl
Filter Insert, Top	Top_Filter_Insert.stl
Filter Insert, Bottom	Bottom_Filter_Insert.stl

STL Files for the Darkfield Inserts

The STL files for the darkfield inserts, which are compatible with both the *BH2-DFR-CD* and *BH2-DFR-AAC* versions of the *BH2-DFR,* are listed in **Table 3**.

Table 3 – STL Files for the BH2-DFR Darkfield Inserts	
Darkfield Insert, 14mm	Darkfield_14.stl
Darkfield Insert, 15mm	Darkfield_15.stl
Darkfield Insert, 16mm	Darkfield_16.stl
Darkfield Insert, 17mm	Darkfield_17.stl
Darkfield Insert, 18mm	Darkfield_18.stl
Darkfield Insert, 19mm	Darkfield_19.stl
Darkfield Insert, 20mm	Darkfield_20.stl
Darkfield Insert, 21mm	Darkfield_21.stl
Darkfield Insert, 22mm	Darkfield_22.stl
Darkfield Insert, 23mm	Darkfield_23.stl
Darkfield Insert, 24mm	Darkfield_24.stl
Darkfield Insert, 25mm	Darkfield_25.stl

STL Files for the Oblique Darkfield Inserts

The STL files for the oblique darkfield inserts, which are compatible with both the *BH2-DFR-CD* and *BH2-DFR-AAC* versions of the *BH2-DFR,* are listed in **Table 4**.

Table 4 – STL Files for the BH2-DFR Oblique Darkfield Inserts	
Oblique Darkfield Insert, 14mm	Oblique_Darkfield_14.stl
Oblique Darkfield Insert, 15mm	Oblique_Darkfield_15.stl
Oblique Darkfield Insert, 16mm	Oblique_Darkfield_16.stl
Oblique Darkfield Insert, 17mm	Oblique_Darkfield_17.stl
Oblique Darkfield Insert, 18mm	Oblique_Darkfield_18.stl
Oblique Darkfield Insert, 19mm	Oblique_Darkfield_19.stl
Oblique Darkfield Insert, 20mm	Oblique_Darkfield_20.stl
Oblique Darkfield Insert, 21mm	Oblique_Darkfield_21.stl
Oblique Darkfield Insert, 22mm	Oblique_Darkfield_22.stl
Oblique Darkfield Insert, 23mm	Oblique_Darkfield_23.stl
Oblique Darkfield Insert, 24mm	Oblique_Darkfield_24.stl
Oblique Darkfield Insert, 25mm	Oblique_Darkfield_25.stl

STL Files for the Oblique Inserts

The STL files for the oblique inserts, which are compatible with both the *BH2-DFR-CD* and *BH2-DFR-AAC* versions of the *BH2-DFR,* are listed in **Table 5**.

Table 5 – STL Files for the BH2-DFR Oblique Inserts	
Oblique Insert, Circle, Small	Oblique_Circle_Small.stl
Oblique Insert, Circle, Medium	Oblique_Circle_Medium.stl
Oblique Insert, Circle, Large	Oblique_Circle_Large.stl
Oblique Insert, Crescent, Small	Oblique_Crescent_Small.stl

Table 5 – STL Files for the BH2-DFR Oblique Inserts	
Oblique Insert, Crescent, Large	Oblique_Crescent_Large.stl
Oblique Insert, Football, Small	Oblique_Football_Small.stl
Oblique Insert, Football, Large	Oblique_Football_Large.stl
Oblique Insert, Sector, Narrow	Oblique_Sector_Narrow.stl
Oblique Insert, Sector, Wide	Oblique_Sector_Wide.stl
Oblique Insert, Wedge	Oblique_Wedge.stl

All of the STL files listed in **Table 1** through **Table 5** are included in the **BH2-DFR_STL_Files.zip** file, which is available for download at the following Google Drive location:

https://drive.google.com/drive/folders/1YmmqtSaPhHaZnf6zRctKjqlMN-LYlQj4?usp=share_link

Slice the STL Files

With the necessary STL files in hand, the next step is to use *slicer* software to process the STL files, to produce GCODE files which are compatible with your specific model of 3D printer. While the exact procedure for using the slicer software is beyond the scope of this document, there are some specific slicing parameters which are recommended. Configure the slicer to create GCODE for a standard 0.4mm nozzle size and 0.2mm layer height, using a 3-layer shell thickness with 20% or greater infill. The various component parts of the *BH2-DFR Accessory Kit* were designed such that no supports, rafts, nor brims are needed to successfully print the parts.

Print the Component Parts

Once you have created the necessary GCODE files from the STL files, the component parts can then be printed on your 3D printer. Before printing, make sure you have a standard 0.4mm nozzle installed on your printer and that the printer has been properly configured to use this nozzle. The parts may be printed using standard PLA filament (this is acceptable for most applications), but if you will be using extremely high lighting intensity, you may wish to use a filament with a higher melting point than PLA, such as ABS, Nylon, or PETG. Whichever type of filament you choose, be sure to use black (or better still, spend a few extra dollars and get a flat-black filament, if available) to reduce the potential for light reflections within the device. Once you have printed the necessary parts, use an X-Acto knife (or similar) with a sharp blade to trim away any bumps, ridges, burrs, or stringing.

Test-Fit the Carriers in the Condensers

The BH2-DFR-AAC version of the BH2-DFR is not compatible with the BH2-CD condenser. Do not insert the BH2-DFR-AAC

carriers into a BH2-CD condenser, otherwise physical damage to the iris mechanism within the BH2-CD condenser may result.

Test Fit the BH2-DFR

Carefully align and press the appropriate insert carrier (*BH2-DFR-CD* or *BH2-DFR_AAC*) into the bottom bore of the applicable condenser (BH2-CD or BH2-AAC), until the flange on the carrier seats against the bottom surface of the circular mounting dovetail on the condenser (**Figure 12,** shown in white for visibility), and then remove it from the bore, taking notice of the insertion and extraction forces required to do so. If necessary, use a fine-grit sandpaper or emery cloth to smooth any rough exterior features of the carrier, until an acceptable fit within the condenser bore has been achieved (be sure to thoroughly remove any sanding dust before re-inserting the insert into the condenser). Once the appropriate *BH2-FDR* insert carrier has been properly fitted to the condenser, repeat the test-fitting procedure with the appropriate shallow and deep filter carriers, using the same condenser.

Figure 12 – The BH2-DFR fitted into a BH2-CD condenser

How to Use the BH2-DFR

The procedure for using the *BH2-DFR* is described in the sections below.

A Few Words of Caution

Due to the close proximity of the inserts of the *BH2-DFR* to the iris mechanism within the condensers, it is critical that the inserts remain properly engaged with their respective carriers whenever the *BH2-DFR* is installed, to prevent damage to the fragile iris mechanism within the condenser. It is strongly recommended that once you find a specific configuration that you wish to use, create a dedicated carrier for this configuration and use cyanoacrylate adhesive (or some other suitable adhesive) to securely bond the insert into the carrier. This will eliminate the risk of damage to the condenser caused by a displaced insert.

Do not adjust the aperture-control ring of the condenser while the BH2-DFR is installed in the condenser. Always leave the aperture diaphragm in the wide-open position while the BH2-DFR is installed.

Setup Microscope for Köhler Illumination

Before installing the *BH2-DFR* onto your microscope, perform a routine Köhler setup using the objective lens you wish to use, to ensure that the condenser is axially centered within the illumination path of the microscope.

Configure the BH2-DFR for the Desired Mode

As described in the ***BH2-DFR Configurations*** section of this document, place the desired insert or Rheinberg filter into the upper end of the appropriate *BH2-DFR* carrier, and (if applicable) install the bottom filter carrier, with the filter present, into the lower end of the insert carrier.

Install the BH2-DFR onto the Microscope

The BH2-DFR-AAC version should never be used in the BH2-CD condenser, as damage to the internal iris mechanism within the BH2-CD condenser could result.

Use the procedure described below to install the *BH2-DFR* onto your microscope.

- Use the condenser focus knob to lower the microscope condenser as far as it will go.
- Loosen the condenser locking thumbscrew on the substage assembly of the microscope stand and carefully remove the condenser from the substage assembly.
- Adjust the aperture-control ring of the condenser to set the aperture diaphragm to the wide-open position.
- With the desired insert or filter in place in the appropriate carrier (and with the bottom filter in place, if applicable), carefully align the insert such that the removal tab points towards the front of the condenser and press the *BH2-DFR* into the bottom bore of the condenser until the flange on the carrier contacts the circular mounting dovetail of the condenser (**Figure 12,** shown in white for better visibility).
- Reinstall the condenser with the *BH2-DFR* fitted onto the substage assembly of the microscope stand and snug the condenser locking thumbscrew to secure it in place.
- Use the condenser-focus knob to return the condenser to its proper operating position.

To prevent damage to the condenser, do not rotate the aperture-control ring while the BH2-DFR is installed in the condenser.

Tips for Using the BH2-DFR

There are many online sites geared towards amateur microscopy, and these sites have a great many references that describe various methods, tips, and tricks for using darkfield, oblique, oblique darkfield, and Rheinberg illumination. That information is readily

available and as such will not be repeated here. Listed below are a few basic things to get you started when using the *BH2-DFR* on your BH-2 scope.

- Proper centering of the condenser is critical for achieving optimal results. The best way to center the condenser is to simply perform a routine Köhler setup on the objective you will be using before inserting the *BH2-DFR* into the condenser bore.
- Proper condenser height is critical for achieving optimal results. Don't be afraid to experiment with the condenser focus knob to achieve the best results.
- Always pre-set the condenser aperture diaphragm to the wide-open setting before installing the *BH2-DFR* and leave it at that setting while the *BH2-DFR* is installed in the condenser.
- The minimum required diameter of the central patch of darkfield and oblique darkfield stops (and the diameter of the central disk of Rheinberg filters) depends on the N.A. of the objective lens that will be used. The higher the N.A. of the objective, the larger the diameter needs to be.
- A simple way to determine the proper diameter of the central patch for darkfield and oblique darkfield stops, as well as the central disk for Rheinberg filters, is to set the N.A. of the condenser to match the N.A. of the objective lens with which it will be used, and then remove the condenser from the scope and measure the resulting opening in the iris mechanism within the condenser. In practice, you should use a somewhat larger stop than this minimum diameter (perhaps 20% larger), to account for imperfections in the focus setting (i.e., height) and axial centering of the condenser, as well as imperfections in the centering of the patch stop or filter within the condenser.
- The *BH2-DFR* can provide great results with most any objective lens up to 20X magnification. Acceptable performance at 40X can usually be achieved with careful setup of condenser centering and focus setting (i.e., height), along with proper selection of the patch stop diameter.
- For darkfield with a 40X objective, use an A40, EA40, or DPlan40 objective, as these optics have a modest N.A. and will therefore give you the best results. Don't waste your time with higher performance 40X objectives, as these premium optics feature a significantly higher N.A., making it all the more difficult to achieve good darkfield.
- The *BH2-DFR* cannot provide darkfield, oblique darkfield, or Rheinberg illumination with 100X objective lenses, as the N.A. of such objectives is too high for simple stops to provide acceptable results. A special oil-wetted darkfield condenser (the BH2-DCW), along with a 100X objective lens with an integral aperture diaphragm to reduce the N.A. of the objective is needed to obtain darkfield from 100X objectives.
- Darkfield is brutal. A single speck of dust or debris at the specimen plane (i.e., on the slide, cover slip, or near the specimen) will light up brightly against the dark background and severely detract from the final image. No matter how well you clean things, you will never be able to eliminate all of the hot spots. So, what about those perfect darkfield images you see in all the articles? How did they get those? Photoshop is your friend.
- While an undersized darkfield stop may not provide acceptable darkfield, it can provide a noticeable reduction in the intensity of the background light, which may be desirable in some situations.
- The custom insert can be used to make custom stops, by drilling or cutting the desired illuminating aperture(s) into the face of the insert. Better still, import the STL file for the custom insert into Tinkercad or Fusion 360 and add the desired features to the model before printing the part.
- If you find yourself using the same two or three inserts or filters over and over in your *BH2-DFR*, do yourself a favor and print a separate carrier for each of these, and then use cyanoacrylate adhesive (or some other suitable adhesive) to glue each insert or filter into its own dedicated carrier. The convenience that this provides (as well as safety for the condenser) makes it well worth the effort.
- If you're lucky enough to have a second condenser on hand, keep one equipped with your favorite *BH2-DFR* darkfield setup (a 20mm stop is a good choice), and use it as your dedicated darkfield condenser. Use the other condenser for straight brightfield work.
- Do you just want darkfield, but don't want to waste a lot of time printing unneeded parts or trying out things that don't work? Print the appropriate insert carrier for your condenser, along with the 20mm darkfield insert. Glue these together and you will have all you need for good darkfield on your BH-2 scope.
- Why waste time with different sizes of darkfield stops? Why not just use a stop with a large diameter all the time? The larger the stop diameter, the less illumination your specimens will receive. So, while the stop needs to be big enough to reliably achieve the darkfield effect, any larger than this needlessly detracts from the maximum image brightness.
- Cut a 19mm disk of linearly polarized film and glue it into the center recess of the *Polarizing DF Insert*. Now, whenever you use that insert, you can place a 45mm linearly polarized filter in the filter recess of the field lens under the condenser, and when oriented perpendicular to the polarizing axis of the 19mm disk, you'll get darkfield. Rotate it 90° and you'll get brightfield. Now isn't this way more convenient than continually fussing with the condenser, to go from brightfield to darkfield? If you remove the filter from the field lens, you'll get brightfield with a background reduced in intensity by 50%. Note that the presence of a polarizing filter in this setup reduces the maximum available light intensity available for darkfield.

How To Contact the Author

Please feel free to direct any questions or comments regarding this document (or BH-2 microscopes in general) to the author as listed on the cover page of this document.